Eastbrook

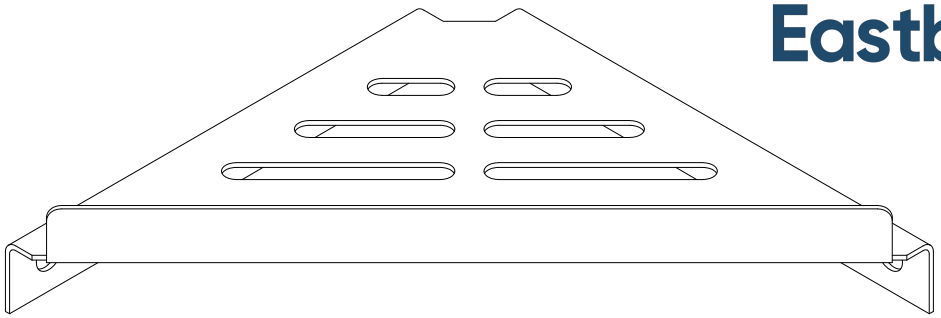

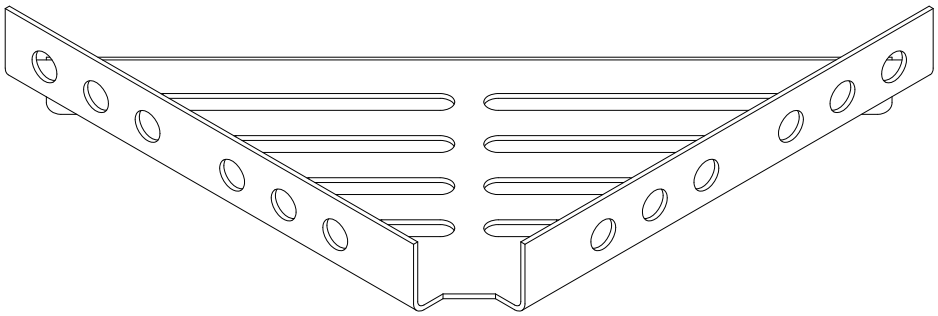

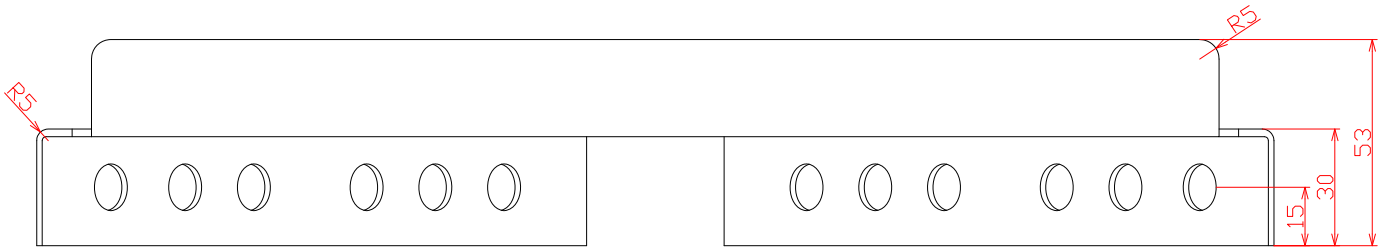

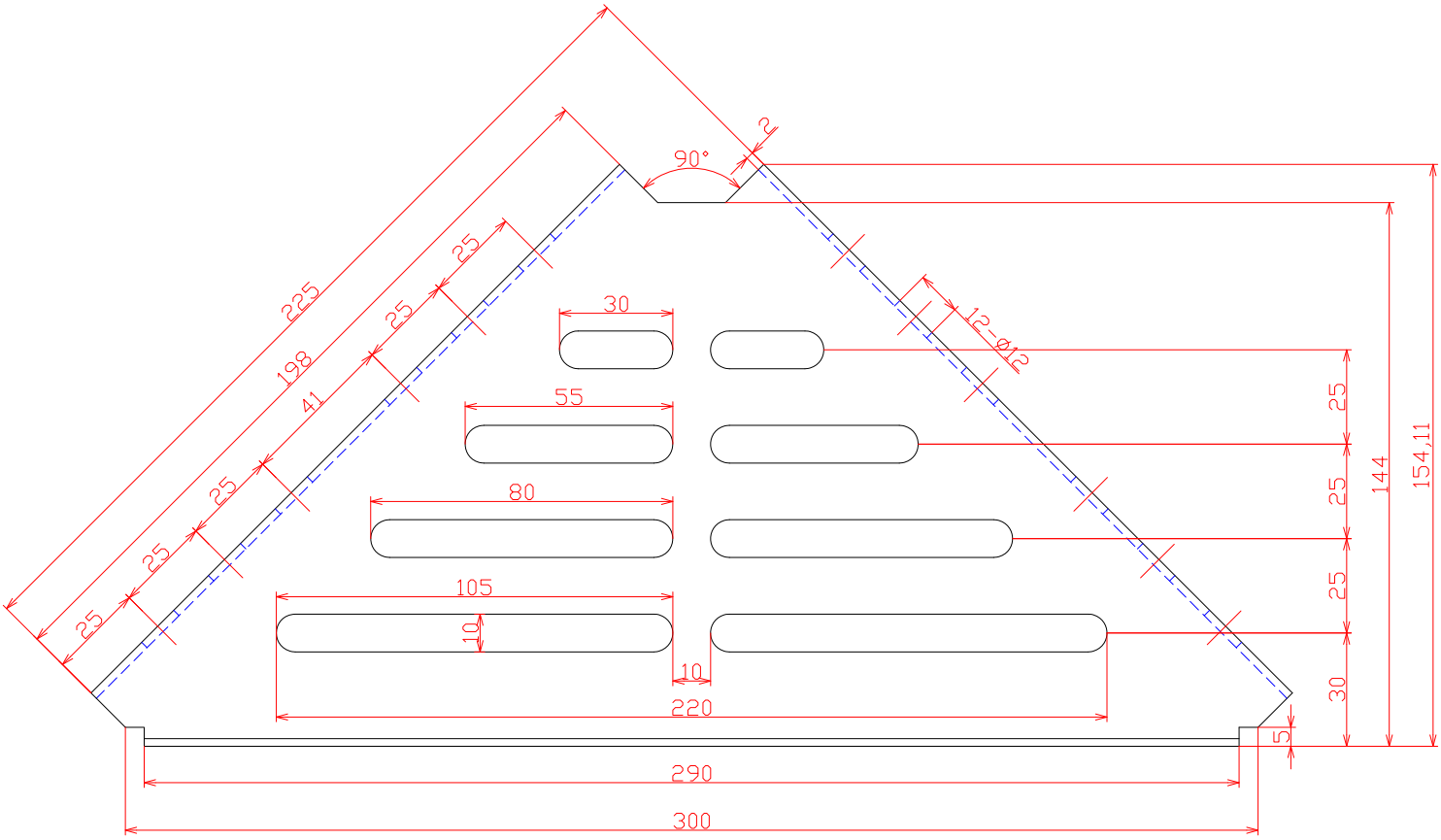

Material		Weight	550g	Scale	1:2	Item No.	
Finish				Date	2025.12.06	Spec.	